ARCANA
CINEMA ANAMORPHIC

Hybrid Anamorphic For Ultimate Visual Quality

By pairing a cylindrical lens with an oval aperture, the Arcana series overcomes the size and image quality compromises of traditional full-frame anamorphic lenses. Our lifting lightweight design delivers exceptional resolution and ultra-low distortion, while the rotating mechanism fine-tunes focus and lens flare of high-end 35 anamorphic glass. It is the perfect balance of portability and ultra-large quality.

2X Bokeh, The Soul of Cinema

The entire series features a dynamic oval aperture design ensuring a consistent and stable at every f-stop. When paired with a 2X anamorphic front cylindrical extender, it effectively produces the "natural" bokeh of its anamorphic lenses. The T2.1 aperture delivers a high-end cinematic look, across, but they, easily exceeding the subjects to create the immersive, three-dimensional depth typical of larger formats.

1.5X	2X	T2.1
Squeeze	Squeeze Optics	Large Aperture

Front-facing cylindrical, Neutral Flare

Featuring a heavy front cylindrical design, Arcana delivers superior optical performance. The front element utilizes a cylindrical design for focusing effects. This complexity comes at the cost of a slight reduction in sharpness, but it results in a more natural, cinematic look and flare, ensuring a smoother, more refined visual experience.

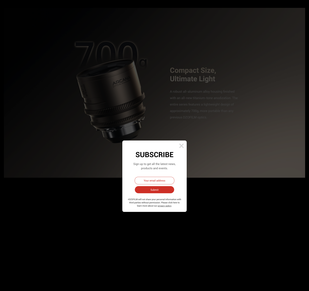

Compact Size, Ultimate Light

A robust yet approachable design, Arcana's compact and ultra-light construction ensures seamless handling. The ergonomic design is optimized for gimbal and crane setups, providing a lightweight, high-performance solution for demanding shooting scenarios.

SUBSCRIBE
Sign up to get all the latest news, products and events.
Your email address
Register
Copyright © 2022 Jian Ying Lens Technology Co., Ltd.
All rights reserved. Arcana Cinema, Arcana Cinema Logo, Arcana Cinema Logo Design are trademarks of Jian Ying Lens Technology Co., Ltd.

With a 2x Arcana Squeeze Anamorphic Optics Attachment, the T2.1 allows for effortless control during quick handheld, gimbal, crane and drone, or when integrated with the 2.5 Mount 4K.

Versatile Compatibility, Infinite Expansion

Arcana 1.5x is equipped with 114mm thread, compatible with mainstream matte filters and mattebox mounting. The 114mm can take premium design accounts compatibility with 200-35mm anamorphic and ultra 35mm anamorphic. Furthermore, the PL mount features a multi-point positioning design for optimal mounting, allowing for easy adaptation to mainstream integration with a wide range of cinema cameras and technical systems.

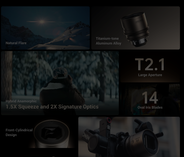

| Specification |

Focal Length	32 mm	45 mm	75 mm
Series	Arcana		
Mount	PL		
Aperture	T2.1-T16		
Image Circle	φ45.5mm (36mm x 24mm)		
Construction Of Optics	13 Elements in 11 Groups	13 Elements in 12 Groups	13 Elements in 11 Groups
Angle Of View(Horizontal/Vertical)	37.5(H) x 21.4(V)	15.5(H) x 20.5(V)	10.5(H)x13.9(V)
Focus Length(Front Focus)	2.50m / 100in	2.50m / 100in	2.70m / 107in
Max Focus Distance	0.78m	0.111	0.116
Max Magnification	0.28x	0.25x	0.17x

Squeeze Factor	1.5X		
Iris Control	Manual (52.26°)	Manual (51.96°)	Manual (59.53°)
Focus Control	Manual 270°		
Front Dia.	φ80mm		
Length(From Lens Front To Flange Plane)	80mm		
Iris Blade	14		
Filter Size	M77		
Gear Pitch	0.8 Mod		
Material	Aluminum Alloy		
Weight (Product)	709g	695g	709g

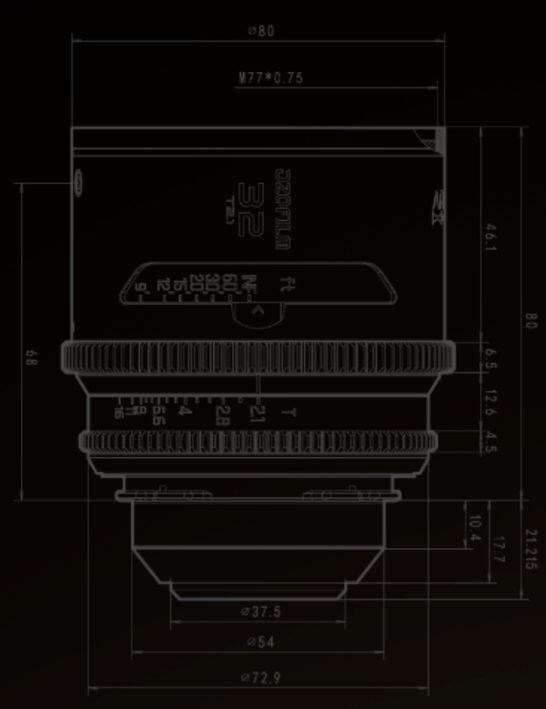

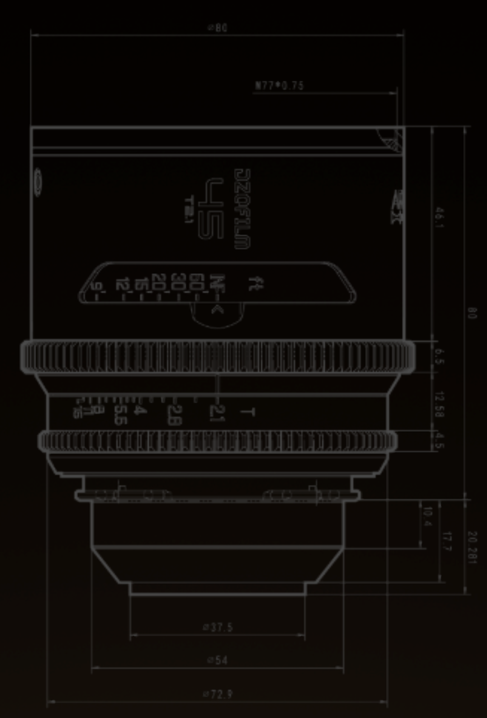

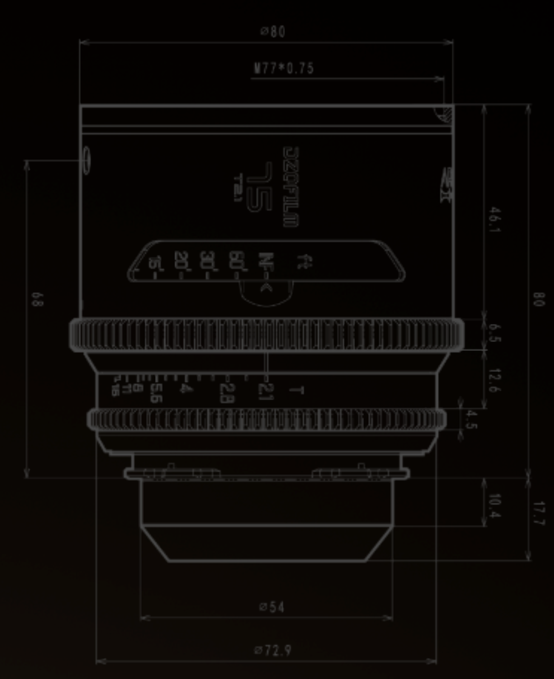

BUY NOW

Copyright DZOFILM Inc. All rights reserved. 粤ICP备17012315号 粤公网安备 44030702004858号

LIGHTED EFFICIENT PROVEN VITALITY CREATIVE & DELIGHTED